alkè
ELECTRIC VEHICLES

ENGLISH

ATXEX
RANGE

ELECTRIC VEHICLES

DELIVERING SOLUTIONS

EXPLOSION PROOF ELECTRIC UTILITY VEHICLE

TOP PERFORMANCE

HEAVY DUTY MECHANICS

ROBUSTNESS: DESIGN TO LAST

MANY CERTIFICATIONS AVAILABLE

BATTERY AUTONOMY UP TO 90 km

WORKING DAYS EXCEEDING 8 HOURS

LOAD CAPACITY UP TO 1,205 KG

TOWING CAPACITY UP TO 4,500 KG

CAN HANDLE SLOPES UP TO 25%

2 - 4 SEATS CAB

ALKE' EXPLOSION PROOF ELECTRIC VEHICLES

The **Alke' ATX EX** Electric Utility Vehciels were developed to work in the hardest, most demanding conditions in chemical and petrochemical industries, production sites of mineral oil and natural gas, mining, tunnel construction and maintenance and many other sectors. They can be used for logistics, maintenance, first aid, firefighting, surveillance services, units with mobile cranes, etc.

The **Alke' ATX EX** are designed to avoid any ignition risk in the surrounding atmosphere during their normal use and are built using special, certified components. Design, prototyping and manufacturing of all Alkè explosion-proof vehicles are carried out entirely in Italy, using the best of European and North American components in order to guarantee top quality and safety standards.

DEALING WITH POTENTIALLY HAZARDOUS ENVIRONMENTS

ATXEX RANGE

SOLUTIONS FOR EXPLOSION PROOF NEEDS

Find out among our configurations the best solution for your needs!

We can develop special configurations upon request for specific applications or sectors like underground (ATEX M2) or environments where explosive materials are present (e.g. ammunitions and firework products - IP 4X and IP 5X).

All the configurations presented are available for the vehicles with:

- 2-seat cab
- 4-seat cab
- left-hand drive

DR1

Dropside body

ME1

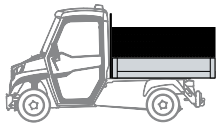

Dropside body with mesh sides extension

BV1

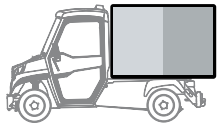

Box van body with sliding doors

TA1

Tarpaulin body openable on three sides

TA2

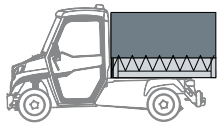

Tarpaulin body with customised colours

RS1

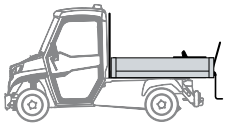

Rear seats kit

RS2

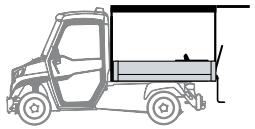

Rear seats kit with roof

AM1

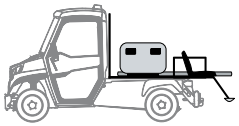

Ambulance body

AM2

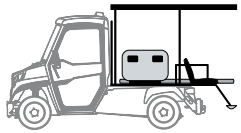

Ambulance body with roof

FL1

Flatbed

ATXEX RANGE

READY FOR THE MOST DEMANDING CONDITIONS

Alke' electric utility vehicles are used daily by the most significant names in industry in more than 40 countries across the globe.

Alke' ATX EX have been operating for years in critical areas such as the frozen lands of northern Europe or the extreme temperatures of the Sahara or other remote locations in the Far East and Africa.

EXPLOSION PROOF APPLICATIONS

oil plants
offshore extraction platforms
natural gas plants
chemical plants
petrochemical industries
tunnels
mines
among others

ATXEX RANGE

FIND OUT MORE ABOUT THE ALKE' ATX MODELS

COMFORT IN THE CAB
Air-conditioning system (work up to 55°C) and electric heating system, both explosion-proof certifiied.

HIGH AUTONOMY AND NON-STOP OPERATION
Battery swap system can double the autonomy, thanks to the fast replace procedure of the batteries.

ATX 340EX

KG
max. capacity **1.205 kg**
max. towing capacity **4.500 kg**

2 SEAT CAB

max. autonomy **90 km**

cargo area **180x125 cm**

ATX 340EDX

KG
max. capacity **1.085kg**
max. towing capacity **4.000 kg**

4 SEAT CAB

max. autonomy **85 km**

cargo area **180x125 cm**

EXPLOSION PROOF COMPONENTS

Alkè explosion proof versions have specific design and safety expedients concerning the electrical system (batteries, connectors, sensors, control unit, etc.) and non-electric parts that could generate high temperatures or sparks (mechanical parts, brakes, plastic elements, etc.)

TEMPERATURE MONITORING SYSTEM

In order to avoid risk of overheating, the surface temperature is checked by a specific sensors, according to the class and limit of the temperature requested as standard. If this occurs, the vehicle will automatically shutdown, lighting the related indicator.

An earth leakage check system (versions for Zones 1 and 21) automatically shuts the vehicle down if the maximum value should be exceeded, lighting the indicator on the dashboard panel.

An appropriate "Reset" pushbutton allows the vehicle to be moved out of the dangerous area in case of temperature and (versions for Zones 1 and 21 only) earth leakage sensor's alarms intervention.

ELECTRICAL EQUIPMENT AND SYSTEM

The electric wiring system has armoured cables for ducts subject to movement or without any mechanical protection.

Light blue wires are used for the connections of components with built-in protection, and their relative cable glands (certified for their respective categories). The system is fitted with a 2-pole emergency battery cut-off switch.

BATTERIES AND CONNECTORS

The Alke' ATXEX versions for Zones 1 and 21 has as vehicle battery type the Ex-e filling system.

Battery connectors are Ex-d type certified. On the versions for Zones 2 and 22 the batteries and relative connectors respect the EN 60079-15 standard.

NON ELECTRIC PARTS

The disk or drum brakes are equipped with wear and temperature sensors to avoid the formation of sparks caused by the friction between metals, and to prevent friction overtemperatures from exceeding the value of the required temperature class and limit.

The seats of versions for Zones 1 and 21 are covered with an antistatic material and, where necessary, the external plastic surfaces are treated with electroconductive paint. All tyres are electro-conductive. Accessories, such as flashing beacon, reversing beeper, headlights, etc. are explosion-proof.

CERTIFICATIONS AVAILABLE

for EUROPE, ASIA, MIDDLE EAST

in conformity with ATEX 2014/34/EU

3G IIB T3 · 3D IIB T3
2G IIB T3 · 2D IIB T3
M2 T150°C

for NORTH AMERICA

in conformity with UL 583, Directive NEC 505

Class I Division 2
Class II Division 2
Class I Division 1
Class II Division 1

for AUSTRALIA

2G IIB T3 in conformity with ATEX 2014/34/EU delivered with CAD certificate for each vehicle plus an overall specific ATEX certificate

ATXEX RANGE

TECHNICAL DATA

The ATX EX electric vehicles are available with 2 or 4 seats cab and a cargo bed with the possibility of customised variants upon request.

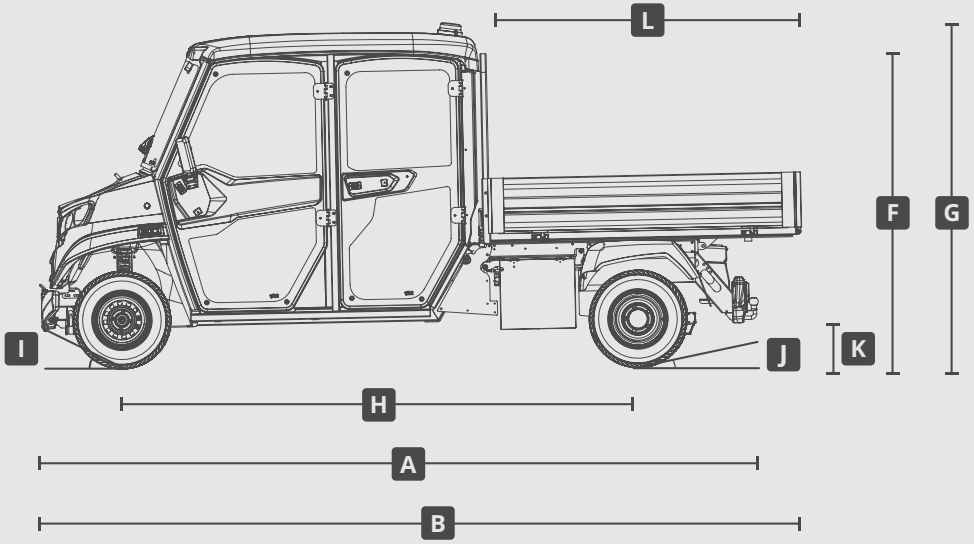

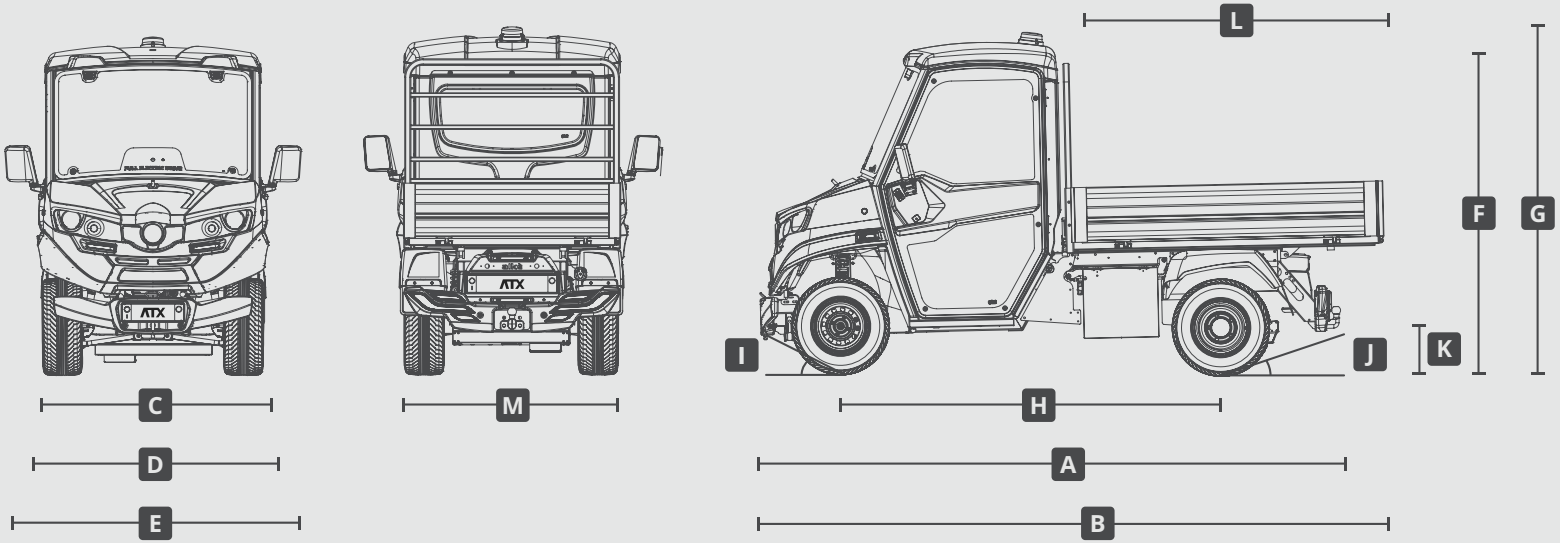

ATXEX technical specifications

			340EX	340EDX	weight [kg]
CAB SEATS					
seats inside the cab			2	4	
PERFORMANCE					
top speed		[km/h]	35	35	
maximum negotiable slope (with high-performance batteries)		[%]	20 (25 empty)	20 (25 empty)	
maximum autonomy	Lead-Acid 14.4 kWh	[km]	100	95	
	Gel 13.2 kWh	[km]	90	85	
DIMENSIONS					
A length (chassis version)		[mm]	3.220	3.980	
B length (version with cargo bed)		[mm]	3.530	4.290	
C vehicle cab width (without rear-view mirrors)		[mm]	1.270	1.270	
D vehicle cab width (with wing mirrors closed)		[mm]	1.320	1.320	
E vehicle cab width (with wing mirrors open)		[mm]	1.570	1.570	
F cab height (with standard tyres)		[mm]	1.850	1.850	
G vehicle height with beacon light (with standard tyres)		[mm]	1.940	1.940	
H wheelbase		[mm]	2.130	2.890	
I approach angle		[°]	40	40	
J departure angle		[°]	12	9	
K rear axle distance from ground		[mm]	130	130	
L maximum loading bed length		[mm]	1.800	1.800	
M maximum loading bed width		[mm]	1.500	1.500	
standard dropside box dimensions	length x width	[mm]	1.800 x 1.240	1.800 x 1.240	
WEIGHTS | CAPACITY AND TOWING					
UVW | unloaded vehicle weight (chassis version with battery)	Lead-Acid 14.4 kWh	[kg]	1.305	1.425	
	Gel 13.2 kWh	[kg]	1.305	1.425	
maximum traction power		[N]	6.500	6.500	
maximum towing capacity (braked trailer)		[kg]	4.500	4.000	
maximum chassis load capacity	Lead-Acid 14.4 kWh	[kg]	1.205	1.085	
	Gel 13.2 kWh	[kg]	1.205	1.085	
MOTOR | CONTROLLER					
48V AC asynchronous induction electric motor			•	•	
maximum motor power		[kW]	14	14	
maximum motor torque		[Nm]	113	113	
CURTIS 48V control electronics			•	•	
vehicle performance settings (ECO and SPORT)			•	•	
TRANSMISSION					
transmission with electronic speed variation			•	•	
rear wheel drive			•	•	
heavy duty differential unit			•	•	
SUSPENSIONS					
front suspension with MacPherson type independent wheels			•	•	
rear suspension with De-Dion bridge and stabiliser bar			•	•	
BRAKES					
front hydraulic discs brakes and rear hydraulic drum brakes			•	•	
rear hydraulic drum brakes with mechanical servobrake			•	•	
parking brake			•	•	
regenerative brake			•	•	

• as standard Δ optional — not compatible

alkè ELECTRIC VEHICLES

ATXEX technical specifications

					340EX	340EDX	weight [kg]
STEERING							
rack and pinion steering					•	•	
minimum turning radius | internal				[mm]	2.600	4.110	
BODY | CHASSIS							
white body					•	•	
customised body colour					Δ	Δ	+ 0.0
steel chassis with anti-corrosion treatment and powder coating finish					•	•	
impact-resistant polyethylene front and rear bumpers					•	•	
SAFETY							
3-point seat belt for driver and passenger(s)					•	•	
presence sensor on driver's seat					•	•	
horn / reverse buzzer					•	•	
safety switch inside the cab for 48 V drive battery					•	•	
tyre repair kit					•	•	
LIGHTS							
front and rear lights in road style					•	•	
full LED rear lights					•	•	
orange flashing LED on cab roof					Δ	Δ	+ 2.0
CAB | COMFORT							
electric demister					Δ	Δ	+ 7.0
adjustable seats					•	•	
front doors					Δ	Δ	
front doors with sliding windows					Δ	Δ	+ 0.0
rear doors					—	Δ	
armrests					•	•	+ 3.5
headrests					•	•	
openable front windscreen					•	•	
manual windscreen wiper					•	•	
DASHBOARD							
ECO / SPORT selector					•	•	
speedometer (km / mph)					•	•	
hour meter					•	•	
indicators			battery state of charge	battery capacity	•	•	
			motor temperature	inverter temperature	•	•	
			inverter errors	current delivered by inverter	•	•	
warning lights	indicators		parking brake	brake oil shortage	•	•	
			low beam headlights	electric motor overheating	•	•	
BATTERY							
type				Lead-Acid 14.4 kWh	•	•	
				Gel 13.2 kWh	Δ	Δ	
number of batteries				Lead-Acid 14.4 kWh	24x2V	24x2V	
				Gel 13.2 kWh	24x2V	24x2V	
estimated battery life				Lead-Acid 14.4 kWh [cycles]	1.500	1.500	
				Gel 13.2 kWh [cycles]	1.200	1.200	
estimated battery charge time				Lead-Acid 14.4 kWh [hours]	8	8	
				Gel 13.2 kWh [hours]	11	11	

• as standard Δ optional — not compatible

ATXEX technical specifications

			340EX	340EDX	weight [kg]
consumption for complete recharge	Lead-Acid 14.4 kWh	[kWh]	13	13	
	Gel 13.2 kWh	[kWh]	12	12	
battery charge on vehicle's external (PFC active)	(power supply 230V 16A 50-60Hz)		•	•	
battery swap system	Lead-Acid 14.4 kWh		•	•	
	Gel 13.2 kWh		•	•	
battery top-up	Lead-Acid 14.4 kWh		•	•	+ 0.0
CONFIGURATIONS AND CARGO AREA ACCESSORIES					
dropside body with manual tipping (aluminium drop sides H30 cm)	180 x 123 cm		•	•	+ 130.0
flatbed for special configurations	180 x 123 cm		Δ	Δ	+ 90.0
mesh sides extension H55 cm with rear drop side with upwards opening	for body 180 x 123 cm		Δ	Δ	+ 29.0
tarpaulin body H108 cm openable on three sides for dropside body	for body 180 x 123 cm		Δ	Δ	+ 30.0
custom colour for tarpaulin body			Δ	Δ	+ 0.0
removable rear seats kit with two independent seats, platform and 2-points seat belts			Δ	Δ	+ 45.0
tarpaulin roof H105 for rear seats kit			Δ	Δ	+ 30.0
ambulance body equipped with spine board and box/seat for medical staff			Δ	Δ	+ 75.0
roof for ambulance body			Δ	Δ	+ 20.0
box van body H122 cm 180 x 125 cm with sliding doors (2 per side)			Δ	Δ	+ 130.0
set 2 shelves for box van body with sliding doors (each shelf covers half of the depth)	180 x 125 cm		Δ	Δ	+ 8.0
FRONT / REAR ACCESSORIES					
front pin tow hitch			•	•	
rear ball tow hitch			•	•	
front protective bumper			•	•	
TYRES					
low-profile road tyres (front and rear 255/55 R 12) or road tyres (front and rear 175/70 R14)			•	•	
spare wheel (provided separately)			Δ	Δ	(ext.) +18.0

note **Top speed:** approximate, obtained on a flat surface in optimum usage conditions and in SPORT mode. **Maximum negotiable slope:** approximate and assessed with vehicle empty in ideal usage conditions on discontinuous ramps. **Maximum autonomy:** approximate and obtained on a flat surface, in optimum usage conditions, with ECO mode and energy saver and adopting a correct driving style, at a speed no higher than 60% of the maximum speed, for non-continuous use (battery discharged in 5 hours). **Estimated battery lifespan:** approximate figure, based on the information in the manufacturer's possession at the time this file was published. **Maximum towing capacity:** calculated in optimum usage conditions, the trailers must have repulsion brakes and comply with the law. Maximum vertical weight on the tow hitch: 120kg. **The technical specifications indicated in this catalogue** (performance, autonomy, dimensions, etc.) depend - or may depend - on temperature, terrain, driving style, accessories, load or use of the vehicle. The data usually refers to use on a flat surface in optimum usage conditions - i.e. a basic vehicle version with no load and with the lightest battery, on an even and paved road surface with an outdoor temperature of 25°C, the battery fully charged, on board electronic devices switched off, and without any other accessory consumption. **The technical specifications,** design and performance levels indicated in this technical data sheet are by way of example only and may be subject to modifications without prior notice.

• as standard Δ optional — not compatible

alkè
ELECTRIC VEHICLES

With more than 25 years of experience and thousands of vehicles on the market, Alke' is a key player in the electric road and industrial vehicle industry at an international level. Its products are positioned at the high end of the market in terms of quality and performance and are now sold in more than 40 countries around the world covering all continents. Amongst its customers, Alke' is proud to be able to include big names in the industry, important organisations and exclusive locations.

25
25 years experience

a key player in the electric vehicle industry

dealers in more than 40 countries

thousands of vehicles sold worldwide

zero emission electric vehicles

TOP
quality, innovation and performance

100% made in Italy

Via Cile, 5
35127 Padua | Italy

+39 049 761208

info@alke.com

www
www.alke.com

BSCIC JAS-ANZ
ISO 9001:2015 - BN17607/17301
ISO 14001:2015 - BN17607/17302
OHSAS 18001:2007 - BN17607/17303

Rev. 181025